RADITEK INC.

Dual-Directional Coupler, Full Bandwidth

code-L

100 to 400MHz, 30dB Coupling, SMA Connectors, 100 Watts

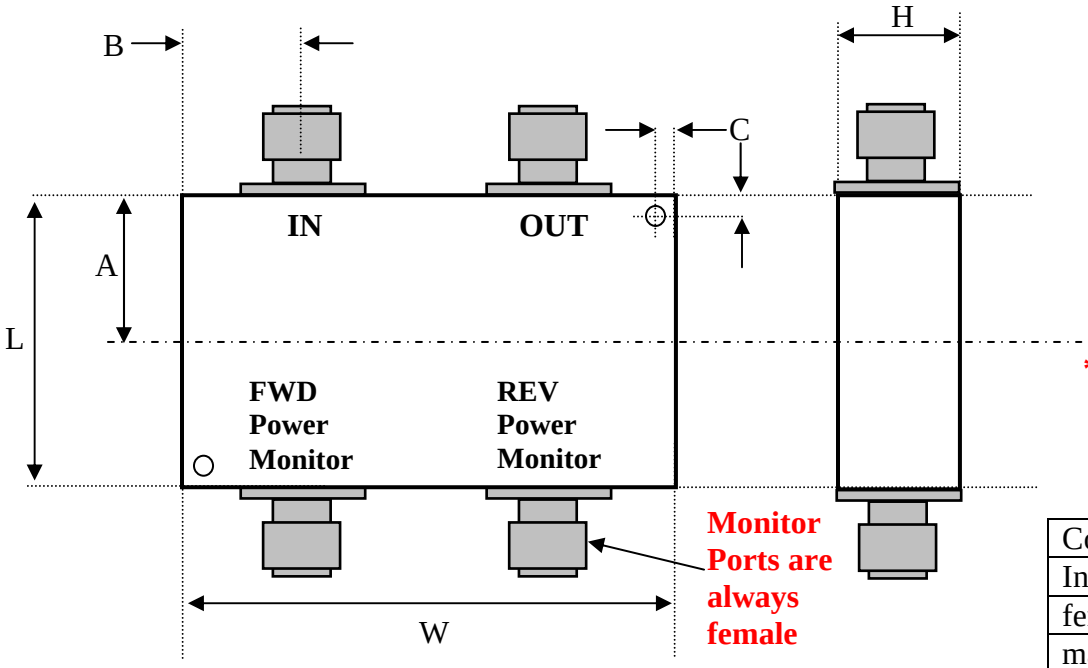

Dimensions (inches)	
L	1.00
W	2.00
H	0.45*
A	0.50
B	0.50
C	0.10

***0.88 for Female N-type, 1.00 for Male N-type and 7/16 connectors**

Connector Options (XX)		
In	Out	code
female	male	1
male	female	2
female	female	3
male	male	4

SAMPLE PART # RBCP-100-400M-30d-S3-100W

SX means SMA connector option.
NX for N-type connector option up to 6GHz only.
(7/16-X) for 7/16 connector option up to 6GHz only

Specifications:

Frequency	**100-400**	**MHz**
Isolation	40	dB min
Insertion loss	0.15	dB max
VSWR (all ports)	1.12:1	Max.
RF Power Average	100	watt max.
RF Power Peak	1000	watt max.
Phase Degrees	+/-3	Degrees
Amplitude Balance	+/- 0.5	dB
Coupling factor	30	dB
Connectors	SMA, N or 7/16	
Temperature	-10 to +55	°C operating
	-30 to 125	°C storage
Housing is Nickel plated Aluminum		

WORLD HQ: 1702H Meridian Ave. Suite 127, San Jose, Ca 95125, U.S.A.
Telephone: (408) 266-7404 FAX: (408) 266-4483
WEB: www.raditek.com, E-mail: sales@raditek.com